1. Safety instructions

1.1 Range of application

AUMA bevel gearboxes GK 10.2 – GK 40.2 are used for the operation of valves (e.g. gate valves and globe valves).
They are designed for manual operation as well as motor operation in conjunction with electric actuators.
For other applications, please consult AUMA. The manufacturer is not liable for any possible damage resulting from use in other than the designated applications. Such risk lies entirely with the user.
Observance of these operation instructions is considered as part of the designated use.
Explosion-proof products are specially marked. The service conditions mentioned in these operation instructions and in the technical data sheet have to be respected during use. Other service conditions require explicit and written confirmation by the manufacturer.

1.2 Maintenance

The maintenance instructions (refer to page 13) must be observed, otherwise a safe operation of the bevel gearbox is no longer guaranteed.

1.3 Warnings and notes

Failure to observe the warnings and notes may lead to serious injuries or damage. Qualified personnel must be thoroughly familiar with all warnings and notes in these operation instructions.
Correct transport, proper storage, mounting and installation, as well as careful commissioning are essential to ensure a trouble-free and safe operation.
The following references draw special attention to safety-relevant procedures in these operation instructions. Each is marked by the appropriate pictograph.

This pictograph means: Note!
“Note” marks activities or procedures which have major influence on the correct operation. Non-observance of these notes may lead to consequential damage.

This pictograph means: Warning!
“Warning” marks activities or procedures which, if not carried out correctly can affect the safety of persons or material.

2. Technical data

Features and functions	
Type of duty	Short-time duty S2 - 15 min (open-close duty) Intermittent duty S4 - 25 % (modulating duty) with the following maximum input speeds: GK 10.2 – GK 16.2 ≤ 45 rpm for 50 Hz GK 25.2 – GK 30.2 ≤ 11 rpm for 50 Hz
Direction of rotation	Standard: Clockwise rotation at input shaft results in clockwise rotation at output shaft Option: GK 10.2 – GK 25.2 Reversal of rotational direction using a reversing gearbox GW 14.1 GK 30.2 – GK 40.2 Alternatively, counterclockwise rotation of direction possible
Stages	One stage: GK 10.2 – GK 25.2 Double stage: GK 30.2 – GK 40.2
Input shaft	GK 10.2 – GK 25.2: For standard reduction ratios, the input shaft is made of stainless steel. Standard: Cylindrical with parallel key according to DIN 6885.1 Option[1]: Square: -tapered (DIN 3233) -cylindrical

Output torques

Type	Output torque Nominal torque max. Nm	Output torque Modulating torque max. Nm	Reduction ratio	Input torque[2] Nominal torque Nm	Input torque[2] Modulating torque Nm	Factor[3]
GK 10.2	120	60	1 : 1	135	66	0.9
			2 : 1	67	33	1.8
GK 14.2	250	120	2 : 1	139	66	1.8
			2.8 : 1	100	48	2.5
GK 14.6	500	200	2.8 : 1	198	80	2.5
			4 : 1	139	55	3.6
GK 16.2	1 000	400	4 : 1	278	111	3.6
			5.6 : 1	198	80	5.0
GK 25.2	2 000	800	5.6 : 1	397	160	5.0
			8 : 1	278	111	7.2
GK 30.2	4 000	1 600	8 : 1	556	222	7.2
			11 : 1	404	162	9.9
GK 35.2	8 000	–	11 : 1	808	–	9.9
			16 : 1	556	–	14.4
GK 40.2	16 000	–	16 : 1	1,111	–	14.4
			22 : 1	808	–	19.8

Operation	
Motor operation	With electric multi-turn actuator, directly Flanges for mounting the multi-turn actuator, refer to separate technical data sheets.
Manual operation	Standard: Via handwheel, directly

Type	GK 10.2	GK 14.2	GK 14.6	GK 16.2	GK 25.2	GK 30.2	GK 35.2	GK 40.2
Handwheel mm	315/ 200	315/ 250	400/ 315	500/ 400	630/ 500	800	800	800

Option: Remote lever arrangement (not included within the AUMA product range)

Valve attachment	
Output drive types	A, B1, B2, B3, B4 according to EN ISO 5210 A, B, D, E according to DIN 3210 C according to DIN 3338 Special output drive types: AF, AK, AG, IB1, IB3, IB4

1) For size, please contact AUMA
2) At max. output torque
3) Conversion factor for output torque to input torque

Service conditions			
Mounting position	Any position		
Enclosure protection according to EN 60 529	Standard:	IP 67	
	Options:	IP 68 (also refer to page 12)	
Corrosion protection	Standard:	KN	Suitable for installation in industrial units, in water or power plants with a low pollutant concentration
	Options:	KS	Suitable for installation in occasionally or permanently aggressive atmosphere with a moderate pollutant concentration (e.g. wastewater treatment plants, chemical industry)
		KX	Suitable for installation in extremely aggressive atmosphere with high humidity and high pollutant concentration
Finish coating	Standard:	Two-component iron-mica combination	
Colour	Standard:	AUMA silver-grey (similar to RAL 7037)	
	Option:	Other colours on request	
Ambient temperature	Standard:	–25 °C to + 80 °C	
	Options:	–40 °C to + 60 °C (low temperature), version L –60 °C to + 60 °C (extreme low temperature), version EL – 0 °C to +120 °C (high temperature), version H	
Lifetime	Open-close duty:	Operation (OPEN - CLOSE - OPEN) with 30 turns per stroke	
	GK 10.2:	20,000 operations	
	GK 14.2 – 16.2:	15,000 operations	
	GK 25.2 – 30.2:	10,000 operations	
	GK 35.2 – 40.2:	5,000 operations	
	Modulating duty[4]:		
	GK 10.2:	5.0 million modulating steps	
	GK 14.2 – 16.2:	3.5 million modulating steps	
	GK 25.2 – 30.2:	2.5 million modulating steps	
Accessories			
Limit switching	Limit switching WSH for manually operated valves. For the signalisation of intermediate and end positions (refer to separate data sheet).		
Reversing gearboxes	Reversing gearbox GW for reversing the rotation direction for manual and motor operation		
Special features for use in potentially explosive atmospheres			
Explosion protection	II2G c IIC T4 in compliance with ATEX 94/9/EC		
Type of duty[5]	During open-close duty: Short-time duty S2 - 15 min. at 50 % of maximum nominal output torque up to GK 14.6 and at 35 % of maximum nominal output torque from GK 16.2 During modulating duty: Intermittent duty S4 - 25 % at maximum modulating torque		
Ambient temperature	Standard:	–20 °C to +40 °C	
	Options:	–40 °C to +40 °C (low temperature) –20 °C to +60 °C –40 °C to +60 °C (low temperature) –60 °C to +60 °C (extreme low temperature)	
	Combinations with actuators SAExC at ambient temperatures > 40 °C with special sizing.		
Further information			
Reference documents	Product description Bevel gearboxes GK 10.2 – GK 40.2 Dimension sheet GK 10.2 – GK 40.2 Technical data GK 10.2 – GK 40.2 Technical data SA/SAR Technical data GW Technical data WSH		

4) The lifetime for modulating duty depends on the load and the number of starts. A high starting frequency will rarely improve the modulating accuracy. To reach the longest possible maintenance and fault-free operation time, the number of starts per hour chosen should be as low as permissible for the process

5) The type of duty must not be exceeded.

3. Transport, storage and packaging

3.1 Transport

- Transport to place of installation in sturdy packing.
- If mounted together with actuator:
  Attach ropes or hooks for the purpose of lifting by hoist only to the gearbox and not to the actuator.

3.2 Storage

- Store in well-ventilated, dry room.
- Protect against floor dampness by storage on a shelf or on a wooden pallet.
- Cover to protect against dust and dirt.
- Apply suitable corrosion protection agent to bare surfaces.

In case gearboxes are to be stored for a long period (more than 6 months), the following points must be observed additionally:

- Prior to storage: Protect bare surfaces, in particular the output drive parts and mounting surface, with long-term corrosion protection agent.
- Check for corrosion approximately every 6 months. If first signs of corrosion show, apply new corrosion protection.

3.3 Packaging

Our products are protected by special packaging for the transport ex works. The packaging consists of environmentally friendly materials which can easily be separated and recycled.
For the disposal of the packaging material, we recommend recycling and collection centres.
We use the following packaging materials:
Wooden material boards (OSB)/cardboard/paper/PE film

4. Fitting the handwheel

For gearboxes designed for manual operation, the handwheel is supplied separately. Fitting is done on site according to figure 1.

Figure 1: Handwheel

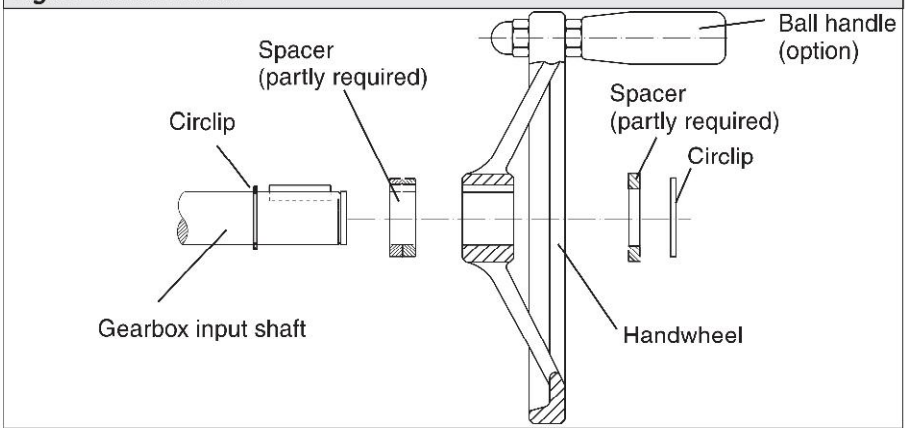

5. Mounting multi-turn actuators SA/SAR

When bevel gearboxes and multi-turn actuators are supplied together, the mounting can be done in the factory up to gearbox size GK 16.2, if desired. For sizes GK 25.2 and larger, the mounting of gearboxes is performed as follows.

In case flange for actuator is not attached to gearbox:
- Thoroughly degrease the mounting faces of the gearbox and flange for actuator.
- Fit flange for actuator and fasten with bolts and lock washers.
- Fasten bolts crosswise to the appropriate torque according to table 2.

Figure 2: Mounting multi-turn actuators onto bevel gearboxes

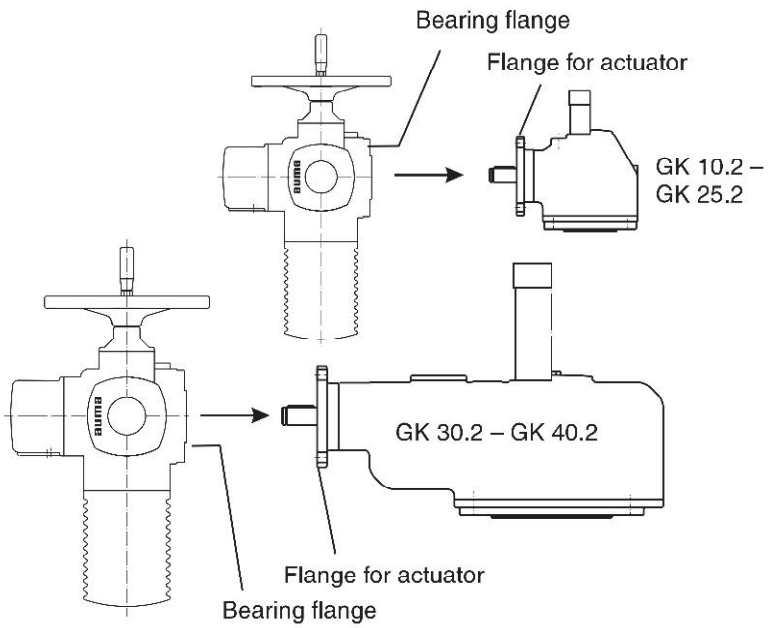

Mounting the multi-turn actuator:
- Thoroughly degrease the faces of the bearing flange at actuator and of the input flange at bevel gearbox..
- Place the multi-turn actuator on bevel gearbox.
  The multi-turn actuator can be positioned on the valve at every 90°.
- Ensure that the spigot mates uniformly in the recess and that the mounting faces are in complete contact.
- Fasten actuator with bolts and lock washers (see table 1) at the flange of the bevel gearbox.
- Fasten bolts crosswise with a torque according to table 2.

Do not attach ropes or hooks for the purpose of lifting the actuator by hoist to the handwheel. If multi-turn actuator is mounted on gearbox, attach ropes or hooks for the purpose of lifting by hoist to gearbox and not to multi-turn actuator.